NORTH

50' 0' 50' 100'
GRAPHIC SCALE

BEARINGS SHOWN HEREON ARE BASED ON A RECORD BEARING OF N 86°42'52"E ALONG THE SOUTH RIGHT OF WAY OF VALARIE LANE RECORDED IN PLAT SECTION "L", PAGE 1080.

BENCHMARK INFORMATION:
CHISELED "L" CUT ON NORTHEAST CORNER OF CONCRETE PAD
ELEVATION=427.17 (NAVD 88 DATUM)

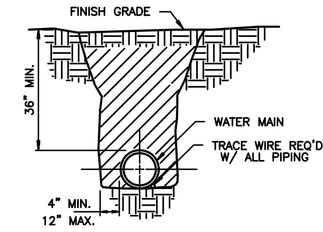

NOTE: ALL TRACE WIRE SHALL BE #12 GAUGE COPPER WIRE INSULATED.

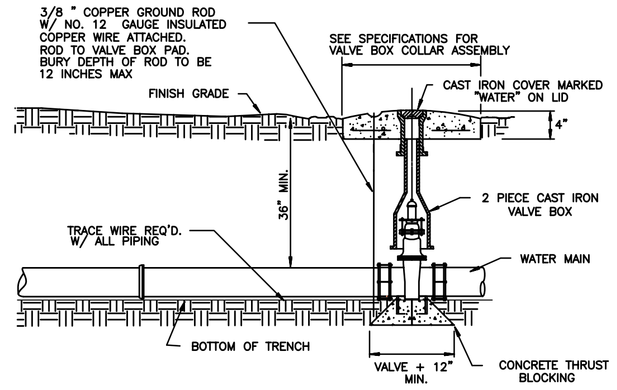

TRACE WIRE INSTALLATION DETAIL (EE)
N.T.S.

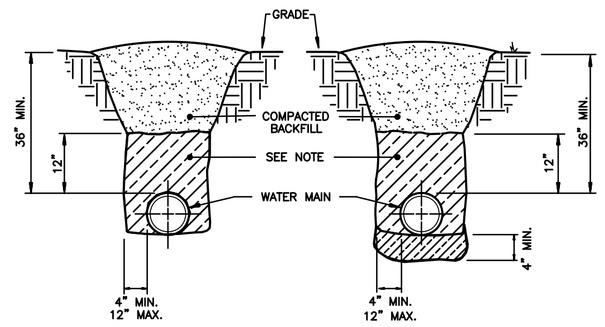

NOTE: COMPACTED BACKFILL SHALL BE PLACED TO A ONE FOOT MIN. DEPTH OF COVER. THE INITIAL BACKFILL SHALL BE A MATERIAL FREE FROM ROCKS GREATER THAN 1/2" DIA., SOIL CLODS, OR FROZEN MATERIAL. IF AUTOMATIC TAMPERS ARE USED, CARE SHALL BE EXERCISED TO AVOID DAMAGE TO THE PIPE.

TYPICAL TRENCH CUT DETAIL (FF)
N.T.S.

UTILITY OWNERS:

JACKSON PURCHASE ENERGY
2900 IRVIN COBB DRIVE
PADUCAH, KY 42003
PHONE: (270) 442-7321

ATMOS ENERGY
3034 PARKER STREET
PADUCAH, KY 42003
PHONE: (270) 443-7235

PADUCAH WATER
401 WASHINGTON STREET
PADUCAH, KY 42001
PHONE: (270) 442-2746

BELL SOUTH
TELECOMMUNICATIONS, INC.,
D/B/A AT&T KENTUCKY
810 KENTUCKY AVENUE
PADUCAH, KY 42001
PHONE: (270) 444-5123

COMCAST CABLE OF
PADUCAH, INC.
800 BROADWAY
P.O. BOX 2700
PADUCAH, KY 42002
PHONE: (270) 442-6382

UTILITY STATEMENT:

THE UNDERGROUND UTILITIES SHOWN HAVE BEEN LOCATED FROM FIELD SURVEY INFORMATION AND EXISTING DRAWINGS. THE SURVEYOR MAKES NO GUARANTEE THAT THE UNDERGROUND UTILITIES SHOWN COMPRISE ALL SUCH UTILITIES IN THE AREA, EITHER IN SERVICE OR ABANDONED THE SURVEYOR FURTHER DOES NOT WARRANT THAT THE UNDERGROUND UTILITIES SHOWN ARE IN THE EXACT LOCATION INDICATED ALTHOUGH HE DOES CERTIFY THAT THEY ARE LOCATED AS ACCURATELY AS POSSIBLE FROM INFORMATION AVAILABLE. THE SURVEYOR HAS NOT PHYSICALLY LOCATED THE UNDERGROUND UTILITIES.

BEFORE YOU DIG (B.U.D. 1-800-752-6007):
BEFORE CONSTRUCTION THE CONTRACTOR SHALL CONTACT BEFORE YOU DIG. AN EXTENDED EFFORT HAS BEEN MADE TO LOCATE AND SHOW UNDERGROUND UTILITIES WITHIN THE CONSTRUCTION AREA, HOWEVER WE DO NOT GUARANTEE THE LOCATIONS, SIZES AND EXISTENCE OF THE UTILITIES. IT IS THE CONTRACTOR'S RESPONSIBILITY TO NOTIFY KENTUCKY UNDERGROUND PROTECTION INC., A MINIMUM OF 48 HOURS PRIOR TO EXCAVATION FOR CONSTRUCTION, AND ALL NON-MEMBER UTILITIES SHALL ALSO BE NOTIFIED A MINIMUM OF 48 HOURS IN ADVANCE OF EXCAVATIONS.

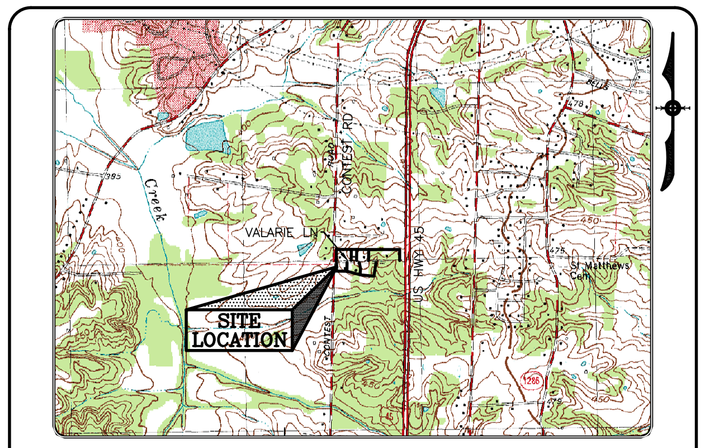

VICINITY MAP
SCALE: 1" = 2,000'

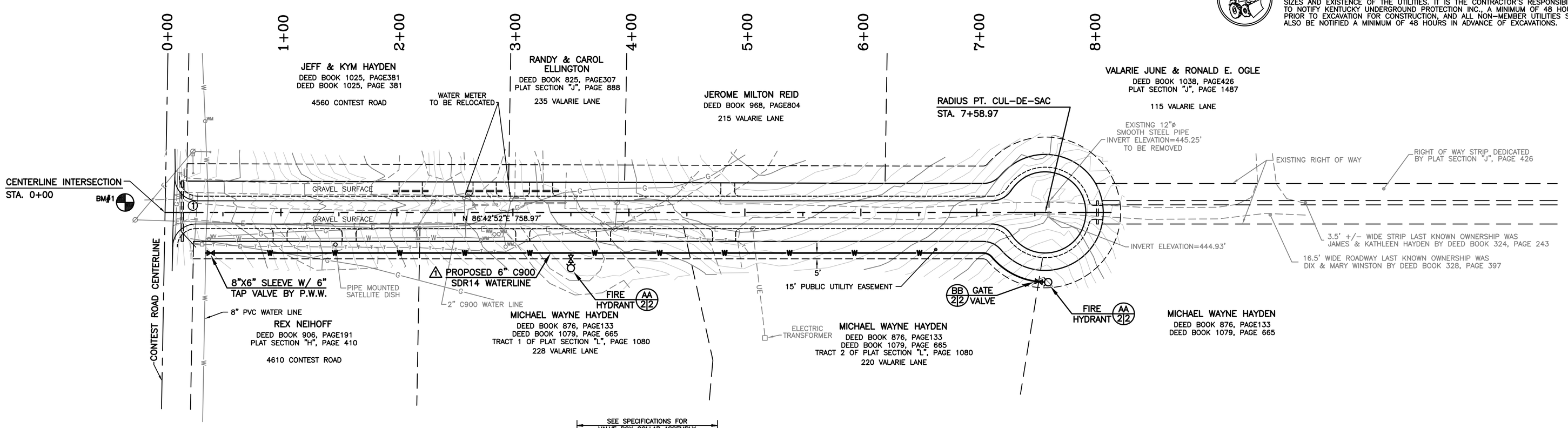

LEGEND

- EXISTING 1/2" DIAMETER REBAR (UNLESS OTHERWISE NOTED)
- 1/2"ø x 18" LONG REBAR WITH PLASTIC CAP STAMPED "R.TOSH KYPLS 2900" (SET)
- GUYWIRE
- WATER VALVE
- WATER METER
- POWERPOLE
- TELEPHONE PEDESTAL
- PROPERTY LINE
- ROAD CENTERLINE
- ADJOINING PROPERTY LINE
- FENCE
- BUILDING SETBACK LINE
- EASEMENT (AS NOTED)
- OVERHEAD UTILITIES
- WATER LINE
- GAS LINE
- UNDERGROUND TELEPHONE
- UNDERGROUND ELECTRIC

NOTE:

1) ALL PROPOSED WATER LINE TO BE C900 SDR14 or APPROVED EQUAL.
2) THE CONTRACTOR and/or ENGINEERING FIRM SHALL PREPARE AND PROVIDE PADUCAH WATER WORKS WITH AS-BUILT PLANS AT THE COMPLETION OF THE INSTALLATION. SHOWING VALVES, TAPPING SLEEVES, FIRE HYDRANTS, ETC...

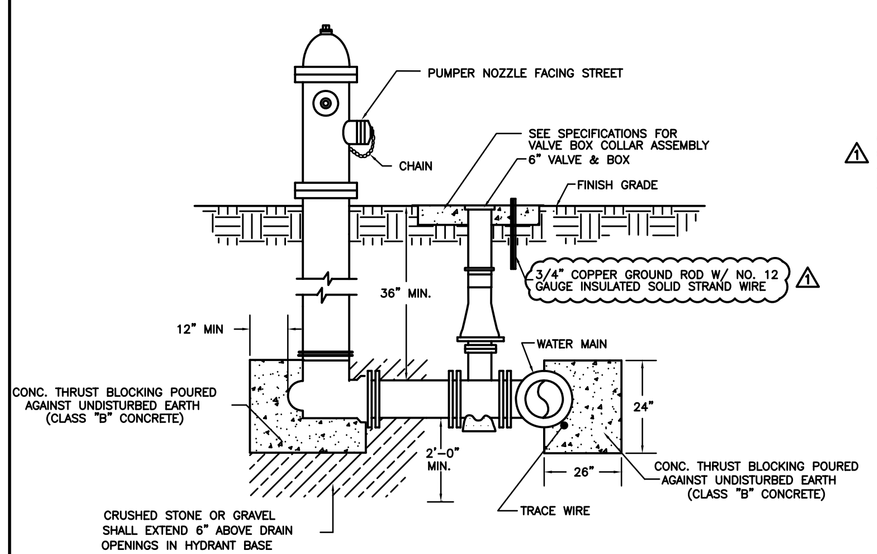

AMERICAN DARLING 884 (NST THREAD) (AA)
N.T.S.

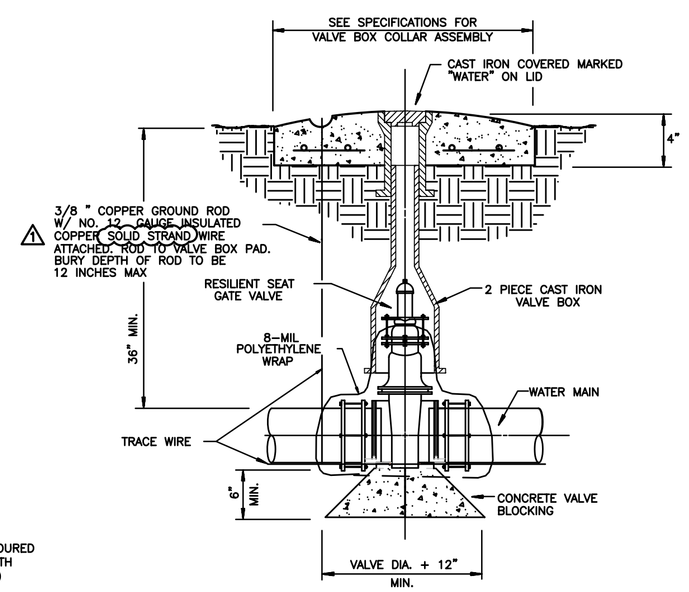

NOTE:
1. CONCRETE PADS SHALL BE CONSTRUCTED AROUND ALL MAIN LINE, FIRE LINE, AND FIRE HYDRANT GATE VALVE BOXES, EXCEPT WITHIN HARD PAVED AREAS.
2. CONCRETE PADS SHALL BE CLASS "A" TYPE PORTLAND CEMENT CONCRETE WITH A WOOD FLOAT FINISH TOOLED EDGE.
3. THE VALVE BOX SHALL NOT TRANSMIT SHOCK OR STRESS TO THE VALVE.

GATE VALVE & BOX COLLAR (BB)
N.T.S.

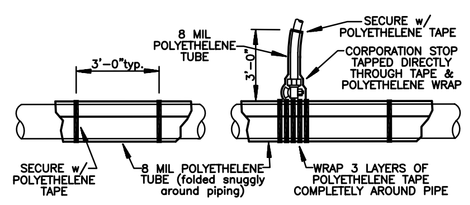

POLY-WRAPPED DIP WATER MAIN

NOTES: 1.) OVERLAP POLY-WRAP 12" AT EACH PIPE JOINT & TAPE SECURELY.
2.) THE COST FOR POLY-WRAP SHALL BE INCIDENTAL TO THE COST OF THE WATER MAIN.

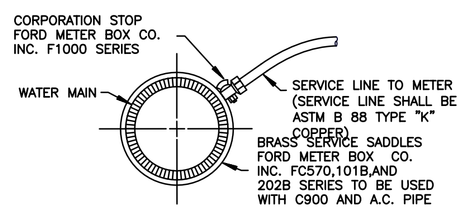

POLY-WRAPPED DIP WATER MAIN (CC)
N.T.S.

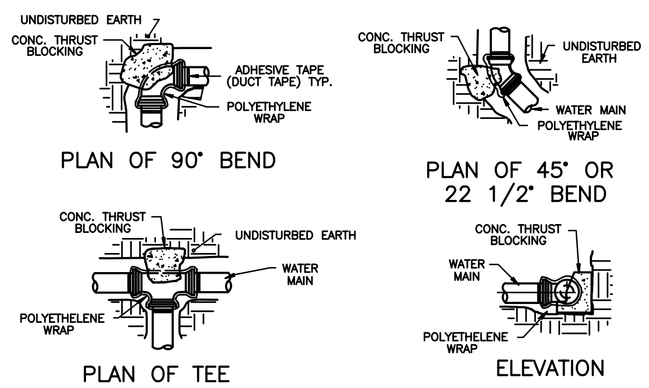

THRUST / POUND OF PRESSURE

PIPE SIZE	DEAD END OR TEE	1/4" BEND	1/8" BEND	1/16" BEND
6"	39	60	54	29

NOTE:
1. ALL DUCTILE IRON AND SDR-21 PVC PIPE, FITTINGS AND VALVES SHALL BE WRAPPED WITH A POLYETHYLENE MATERIAL, 8-MIL.
2. BLOCKING SHALL BE POURED AFTER THE POLYETHYLENE WRAP IS IN PLACE.
3. BLOCKING SHALL BE INSPECTED BY WWWD AND/OR THE DESIGN ENGINEER'S INSPECTOR PRIOR TO BACKFILLING.
4. THRUST BLOCKS TO BE PLACED AGAINST UNDISTURBED EARTH. USE ADDITIONAL CONCRETE AS REQUIRED FOR OVER EXCAVATION.

CONCRETE THRUST BLOCKING DETAIL (DD)
N.T.S.

Paducah Water Works
General Construction Guidelines
For Water Main Installation

⚠ a. No construction of the proposed water main shall begin until approval by Paducah Water per the Agreed Order DWO 06004.

b. Preconstruction meeting shall be held with the engineer, PWW, and mechanical contractor.

c. Contractor shall notify PWW and the engineer of the project superintendent's name.

d. Contractor shall notify PWW and the engineer twenty-four (24) hours prior to beginning construction.

e. PWW shall inspect the materials twenty-four (24) hours prior to beginning construction.

f. PWW inspector shall periodically inspect any or all aspects of construction.

g. PWW shall inspect all mechanical joint fitting installation prior to backfilling to insure proper restraint and thrust blocking as to PWW Standard Specifications. Any fitting backfilled before the inspection shall be laid exposed at the contractor's expense.

h. PWW working hours shall be between 7:30 a.m. and 3:00 p.m., Monday through Friday.

i. Pipe shall be plugged at any time construction work is not taking place.

j. PWW inspector and contractor's job superintendent will insure all valves are in the open position prior to testing of the new system (potable and fire).

k. Pressure testing must be scheduled between 7:30 a.m. and 1:30 p.m. The contractor shall notify PWW two (2) working days prior to testing.

l. Upon completion of the pressure test, the new system must be chlorinated to a minimum of 50 ppm upon initial test and to a minimum of 25 ppm after a twenty-for (24) hour period.

m. Upon completion of the chlorination test, the contractor shall flush the new system to obtain a chlorine level of less than 2 ppm. The samples shall be collected at the beginning of the new line and at each blow-off along the new system.

n. All taps will be scheduled two (2) working days in advance with PWW after all tests have been completed and fees paid.

o. All tie-ins shall be scheduled two (2) working days in advance with PWW upon completion of all tests and taps.

p. PWW inspector shall be on site during the tie-in and placement of the thrust restraints and prior to backfilling.

q. The new main shall be properly flushed upon completion of all tie-ins.

COPYRIGHT:
ALL RIGHTS RESERVED – COPYRIGHT © 2010 DUMMER SURVEYING & ENGINEERING SERVICES, INC. Reserve all rights to the information shown hereon. These plans may not be reproduced or copied without the express written consent of DUMMER SURVEYING & ENGINEERING SERVICES INC. with full penalty of the law.

REV. No.	DATE	
1	9/14/11	REVISIONS PER P.W.W. COMMENTS

DUMMER SURVEYING & ENGINEERING SERVICES, INC.
434 South 6th Street
Paducah, Kentucky 42003
KY. 270-444-0220 FAX 270-444-9493
IL. 618-524-4209 www.dsande.com

SHEET NAME : WATER LINE EXTENSION PLAN AND DETAILS
PROJECT NAME : VALARIE LANE
PROJECT LOCATION : VALARIE LANE, McCRACKEN COUNTY, KY

PRELIMINARY DESIGN BY / DATE :	D.BOSCH 7/14/11	COORD FILE :	2009136
DRAWN BY / DATE :	D.BOSCH 7/14/11	SCREEN FILE :	2009136 WATER
REVIEWED BY / DATE :	J.MUNDY 7/14/11	DS&E JOB No:	2009136
APPROVED BY / DATE :			

ENGINEER'S STAMP

SHEET No. 2